Oregon State University
School of Mechanical, Industrial & Manufacturing Engineering

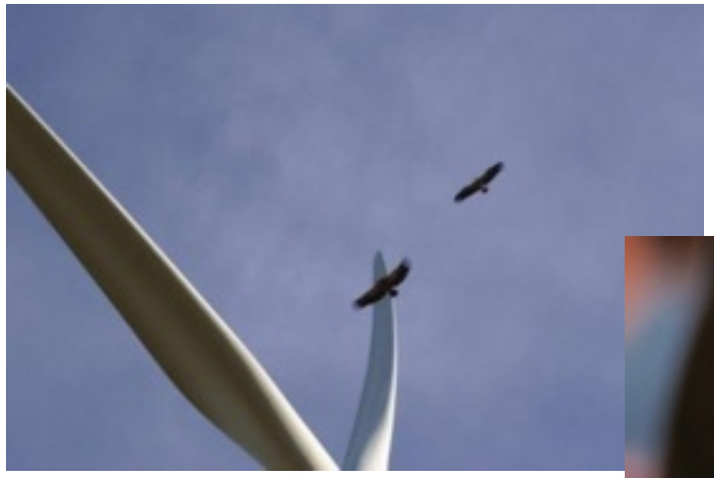

A System for Eagle Detection, Deterrent and Collision-Detection for Wind Turbines

Roberto Albertani, Matthew Johnston, Sinisa Todorovic, OSU
Manuela Huso, Todd Katzner, USGS

National Wind Coordinating Collaborative Webinar: Upcoming Research on Eagle Impact Minimization Technologies Supported by the U.S. Department of Energy
May 19th, 2017

Oregon State UNIVERSITY

Outline

- Motivations
- Eagle detection
- Eagle deterrent
- Blade impact detection
- Acknowledgements

Motivations

- Support the growth of domestic wind energy and protecting wildlife
- Simple and affordable system for eagle detection and deterrent
- Autonomous blade strike detection and species recognition for deterrent validation, certification and site assessment

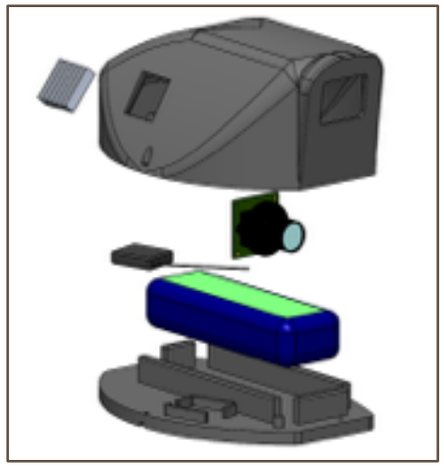

Oregon State UNIVERSITY

Wireless Network Topology

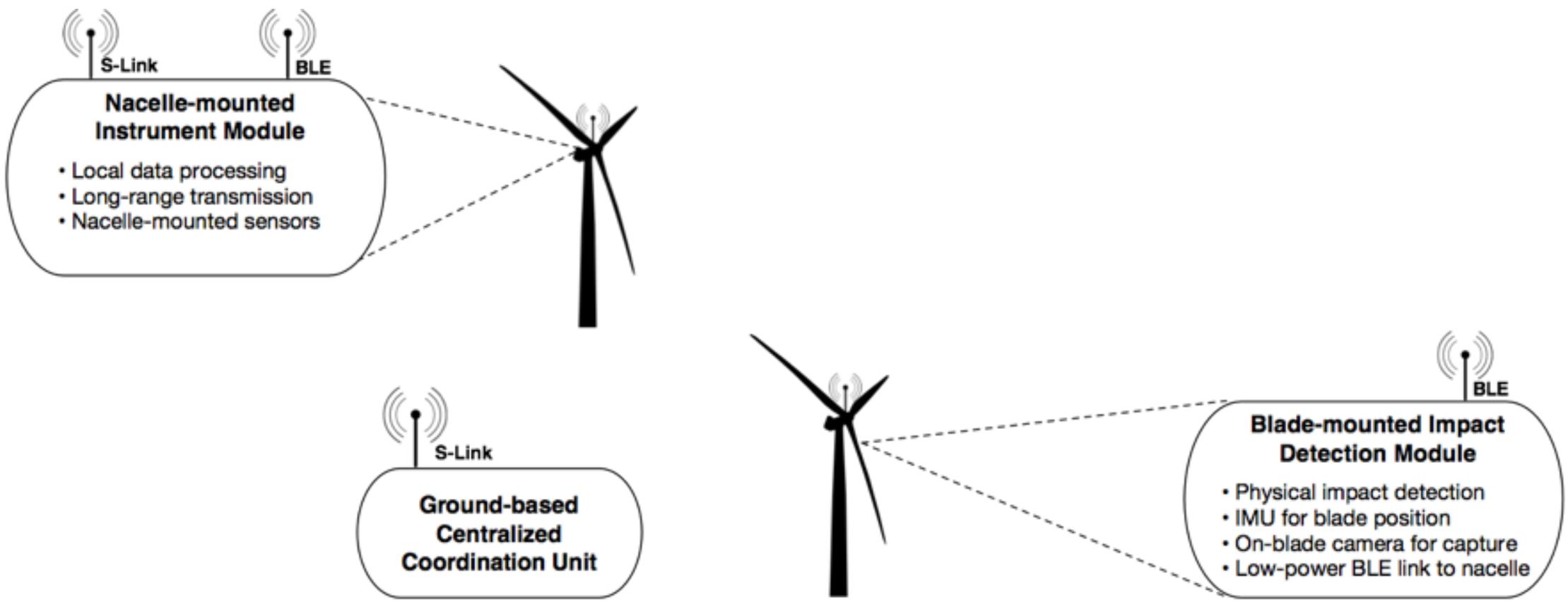

- Bluetooth low energy (BLE) for short range communication provide maximum battery life for on-blade module
- Nacelle-mounted module acts as range extender, communicating with ground-based computer over long-range RF wireless channel (Symphony Link @ 915 MHz ISM band)

Oregon State UNIVERSITY

Synchronized Sensors

- Three nodes controlled by central computer
  - Eagle detection
  - Eagle deterrent
  - Blade impact detection and specie recognition

Blade Vibration Node

Blade Optical Node
Wireless Micro Camera

Eagle Detection

Central Processing

Remote Transmission of "Event" Data

Eagle Deterrent

Oregon State UNIVERSITY

Eagle Detection

- Single 360^0 FOV camera for eagle detection, standard structure-from-motion framework for eagle trajectory estimate
- Off the shelf components, affordable, reliable
- Limited number of frames required, low resolution
- Easy installation, standard interface with computers
- Deep neural network algorithm

Oregon State UNIVERSITY

Computer Vision for Eagle Detection in Videos

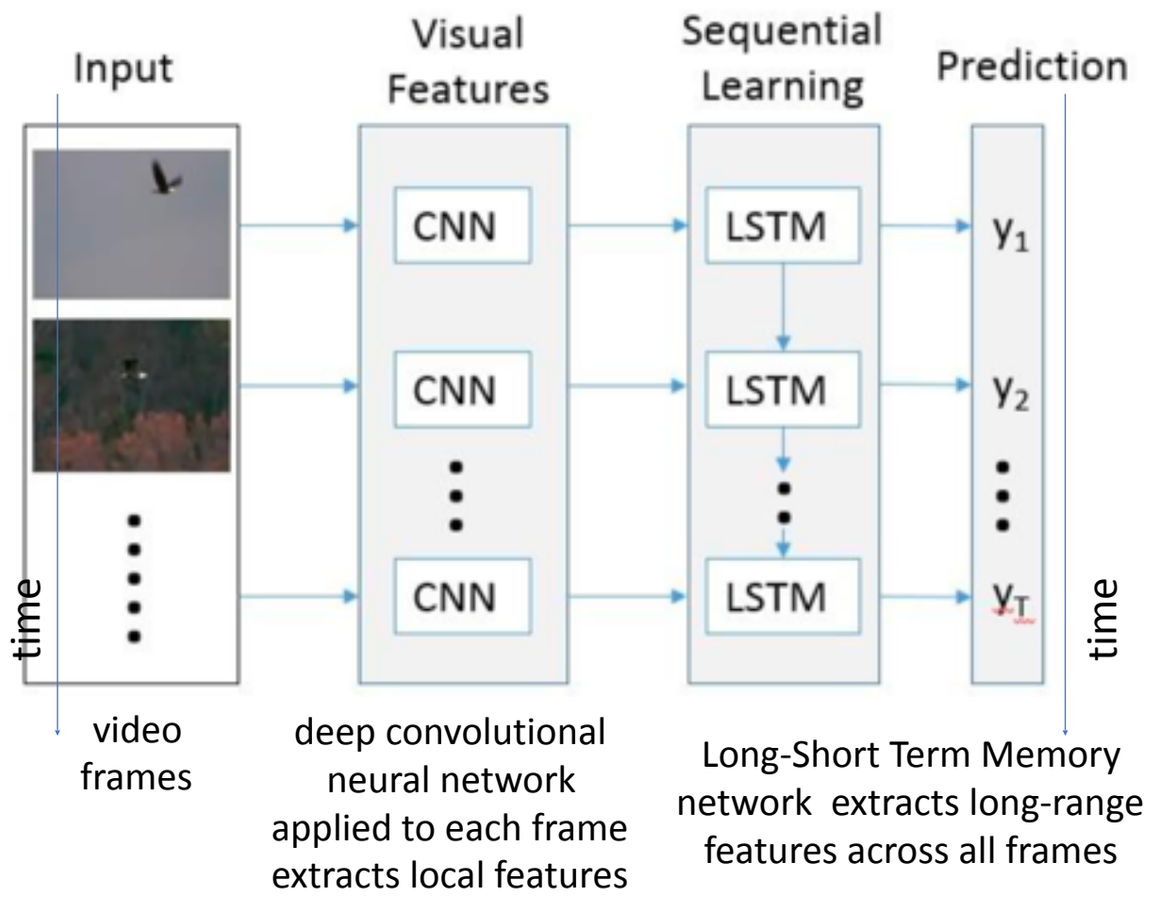

Preliminary Results

Falcon — 20 videos

Eagle — 30 videos

Seagull — 18 videos

Each video ≈ 200 frames with 320x240 pix.

video classification accuracy

network	falcon + seagull	eagle
CNN	93.3%	69.2%
CNN + LSTM	100%	84.6%

Oregon State UNIVERSITY

Eagle Deterrent

- Wind dancer: simple, affordable, reliable off the shelf
- Cluster activated by detection system
- Operation in sequence or random order
- Fail-safe activation for false positive detection not a problem for energy production or turbine operations

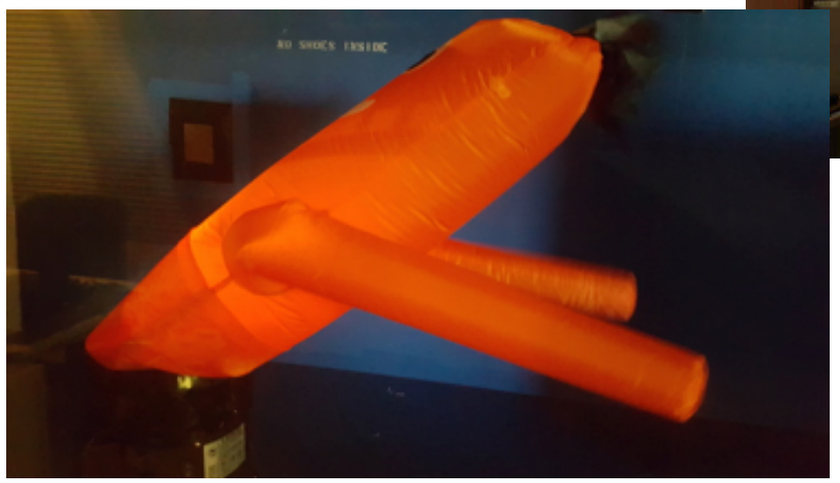

Oregon State UNIVERSITY

Impact Detection: Previous Research

- Funded by US DoE Golden Field Office
- Event-based recording of video data
  - Selected number of frames before and after event
- Central data processing on PC in turbine nacelle

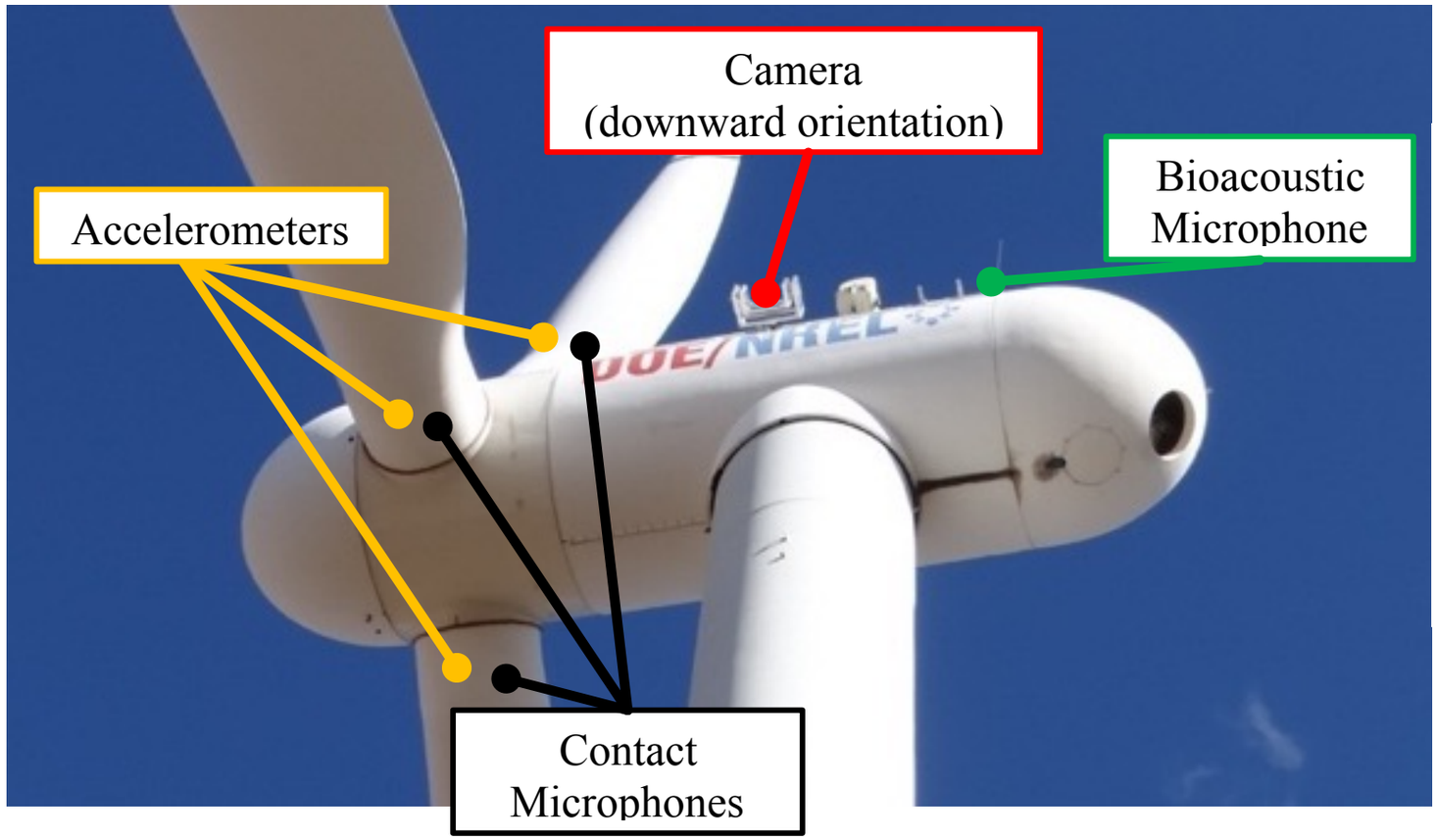

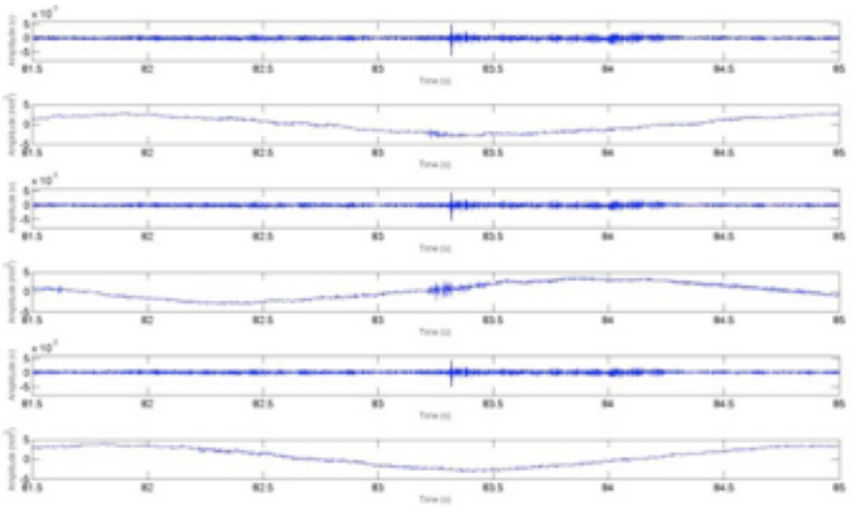

Recording of simulated impact on one blade

Tests performed with WWG-0600 CART3 turbine at National Wind Technology Center (NWTC) at NREL

Oregon State UNIVERSITY

Vibrations Node for Blade Impact Detection

- Integrated IMU for position and blade velocity
- On-board signal processing for real-time event detection
- Cross-correlation of sensor signals removes noise and improves SNR
- Sensor fusion to decrease missed detection rate and false alarm rate

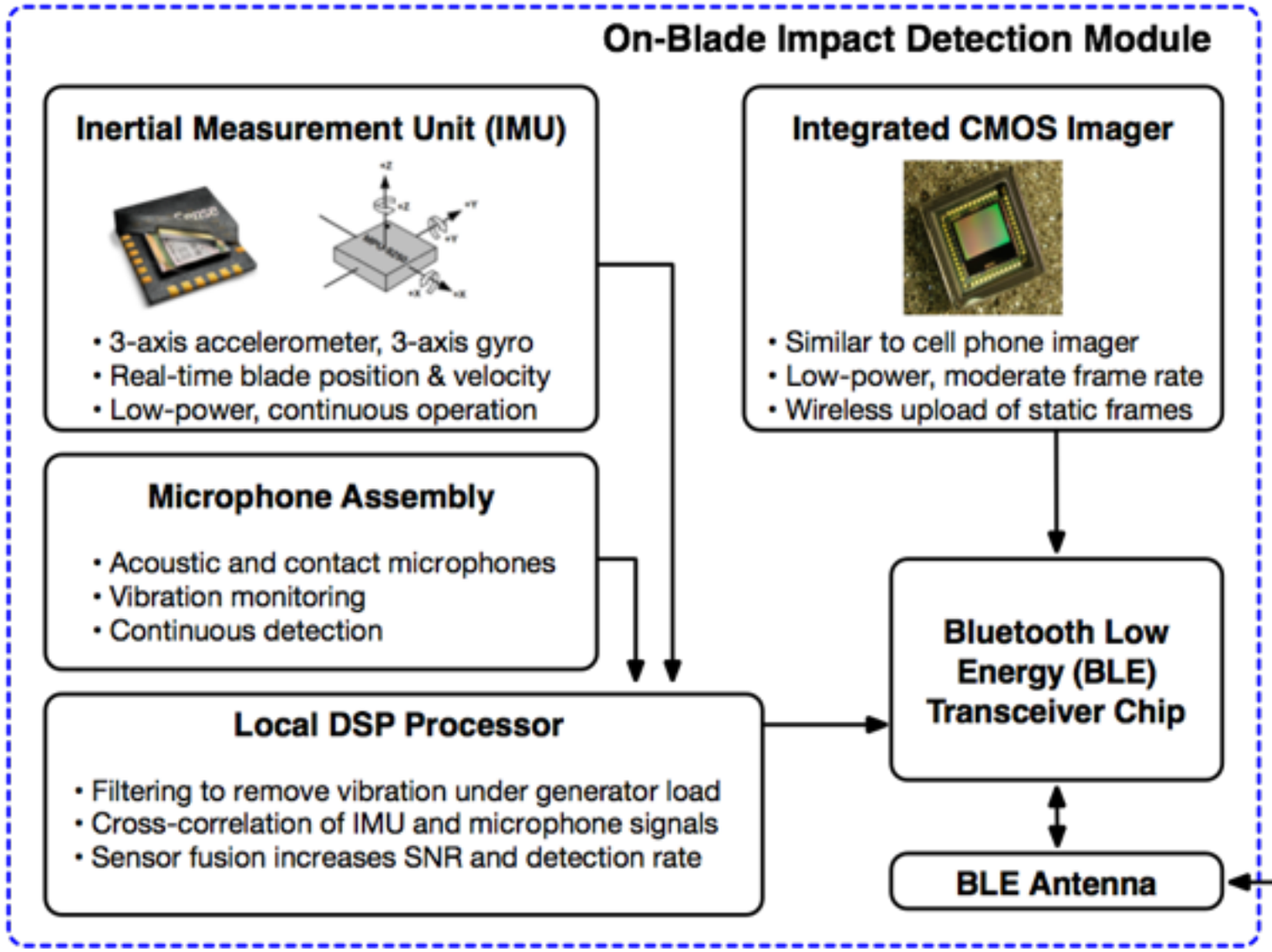

Acknowledgements

Current funding:

- US Department of Energy, Golden Field Office

Team:

- US DoE-NREL National Wind Technology Center
- North American Wind Research and Training Center, Mesalands CC, NM
- External Advisory Board:
  - Wind Energy industry
  - Dr. Rob Suryan, Associate Professor - Senior Research, Department of Fisheries and Wildlife, Oregon State University
  - Doug Warrick (Associate Professor, Department of Integrative Biology, Oregon State University

Oregon State UNIVERSITY

Oregon State University
School of Mechanical, Industrial & Manufacturing Engineering

A System for Eagle Detection, Deterrent and Collision-Detection for Wind Turbines

Roberto Albertani (roberto.albertani@oregonstate.edu)

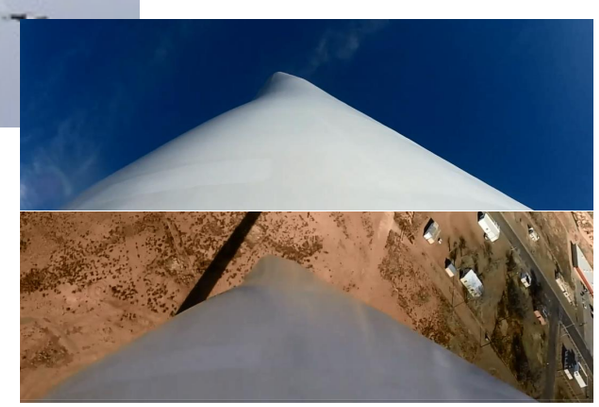

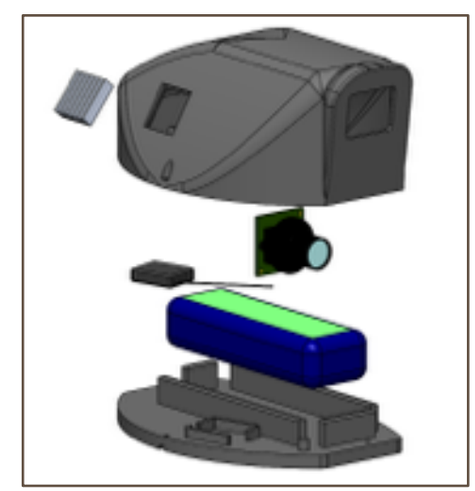

Questions ?